PDF/A, meet PDF/E

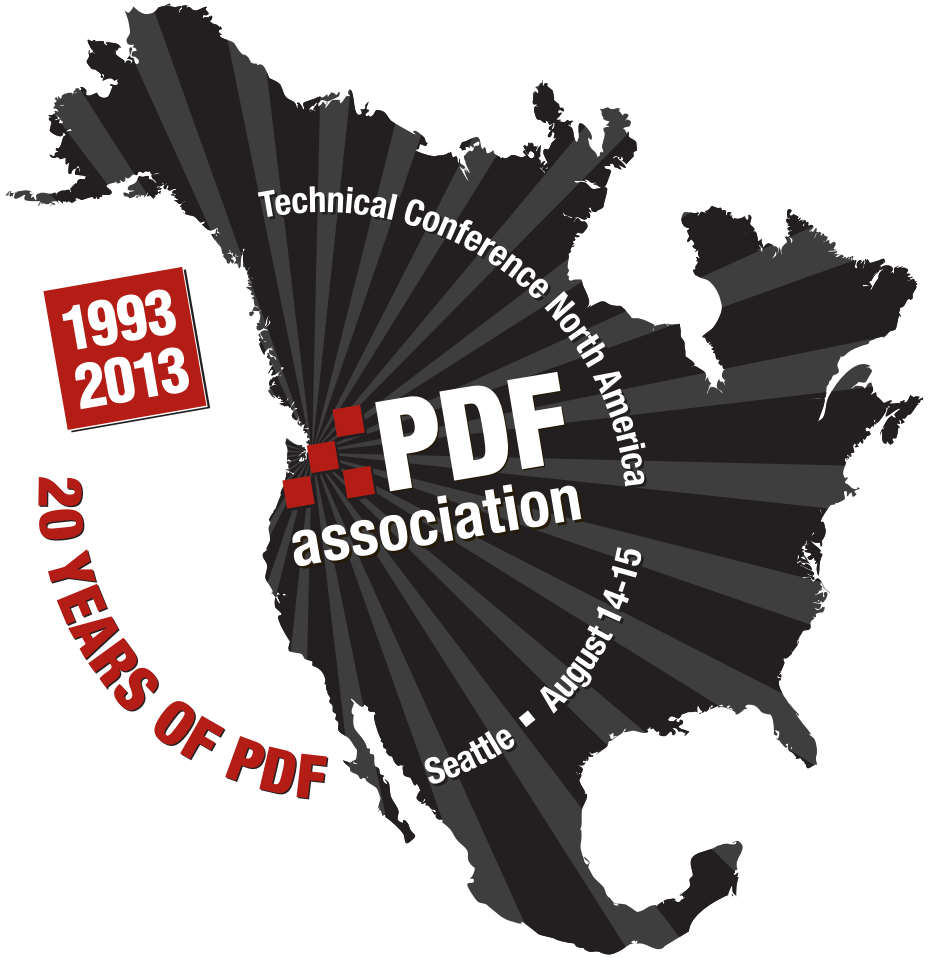

Dave Opsahl
Phil Spreier

3D PDF Consortium

A PDF Association Presentation · © 2013 by PDF Association · www.pdfa.org

What is PDF/E?

- **The engineering document format**

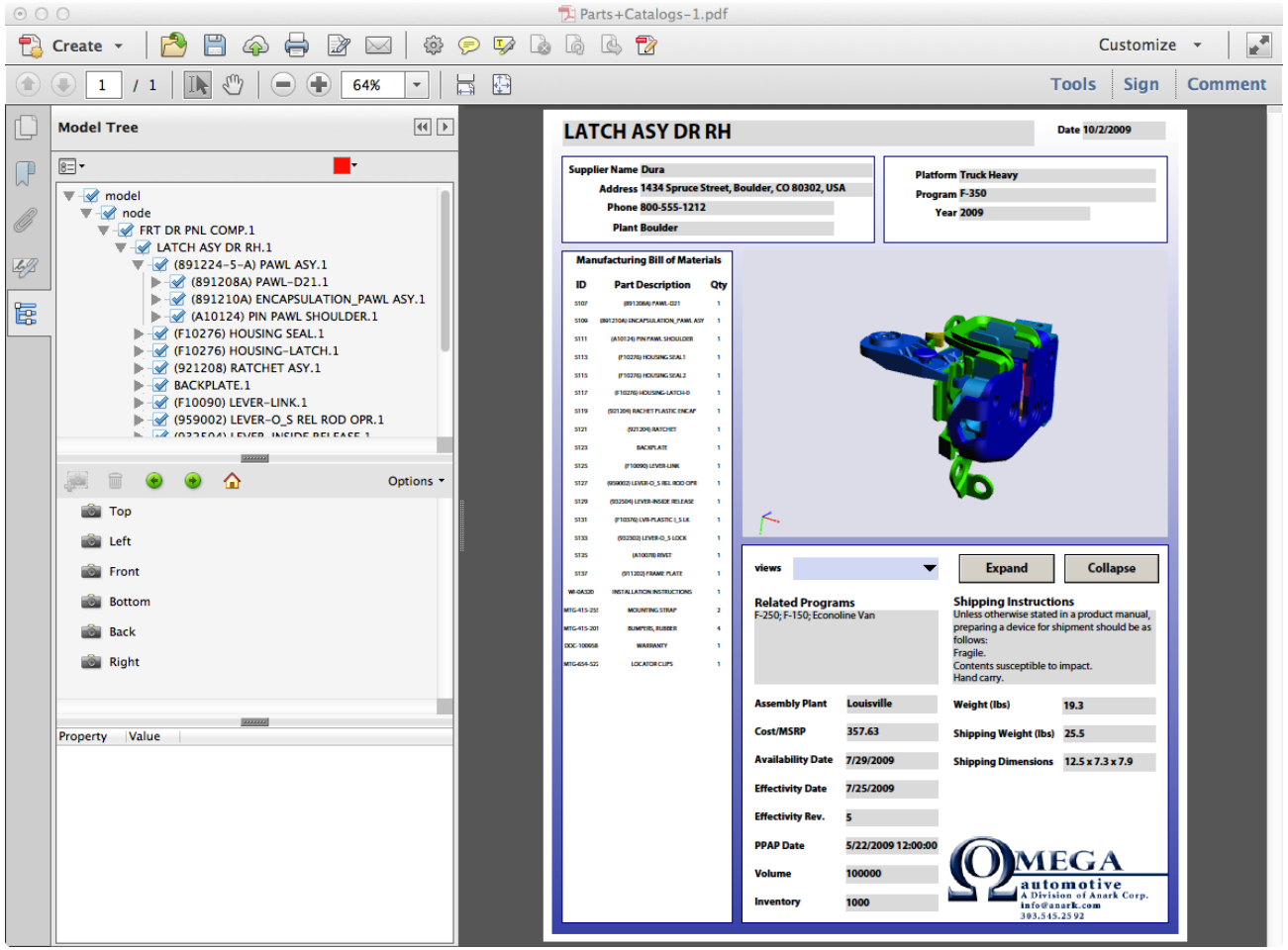

A PDF Association Presentation · © 2013 by PDF Association · www.pdfa.org

Why develop an engineering version of PDF?

- Engineering today is mostly done in 3D
- Multiple proprietary CAD data formats exist
  - AutoCAD, CATIA, Siemens NX, PTC Creo, etc.
- Tools for proprietary formats are expensive
- Existing open standards for CAD data are too old (IGES) or do not have a standard viewer available (STEP, JT)
- Estimated that there is up to 4 times the demand for CAD data outside the engineering department – RFI/RFQ, assembly instructions, maintenance manuals, marketing, etc.

A PDF Association Presentation · © 2013 by PDF Association · www.pdfa.org

PDF/E (ISO 24517-1:2008)

- Based on PDF (ISO 32000-1)
- Covers 3 primary areas:
  1. Incorporation of complex engineering data into compact PDF (3D, object-level data, etc.)
  2. Accurate printing of engineering drawings
  3. Support for secure exchange/management of annotation and markup data
- Constrained to provide predictability
  - All fonts MUST be embedded
  - No external resources; self contained
  - 3D, Layers, Multimedia

A PDF Association Presentation · © 2013 by PDF Association · www.pdfa.org

PDF/E Example

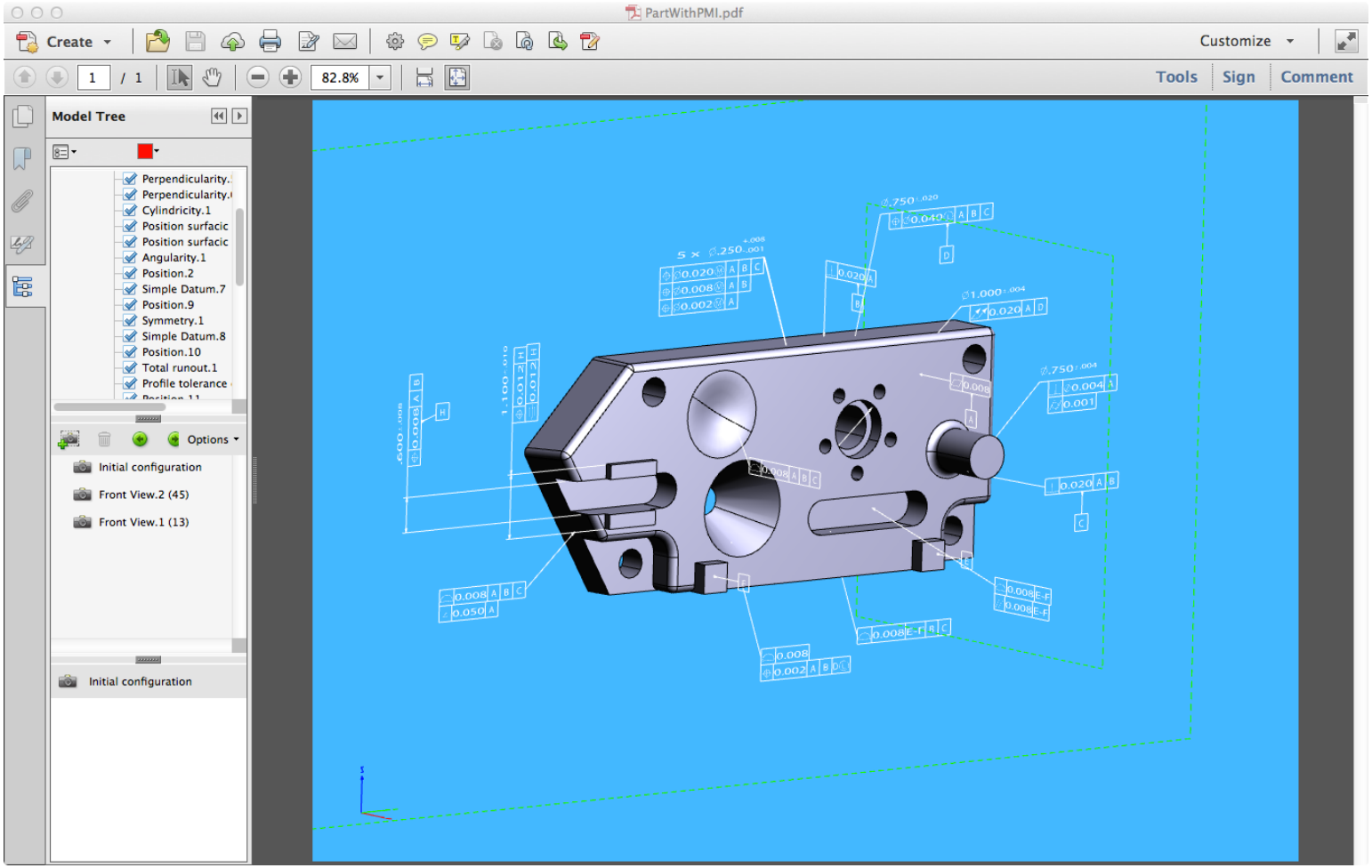

A PDF Association Presentation · © 2013 by PDF Association · www.pdfa.org

The need to archive PDF/E

- Long life cycle products
  - Airplanes
  - Ships
  - Automobiles
  - Buildings
  - Nuclear Power Plants
  - Off Short Platforms
  - Etc.

- Need to maintain / repair / operate these designs throughout their lifecycle

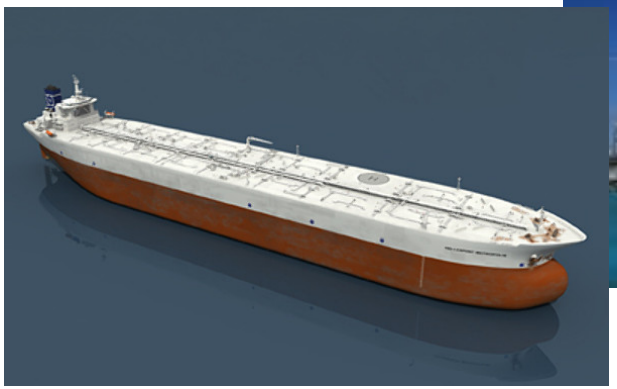

A PDF Association Presentation · © 2013 by PDF Association · www.pdfa.org

Engineering archival requirements

- Model has to maintain it's original form
  - 3D data has to remain 3D i.e no flattening
- Preserve relationships between multiple objects
  - Assemblies

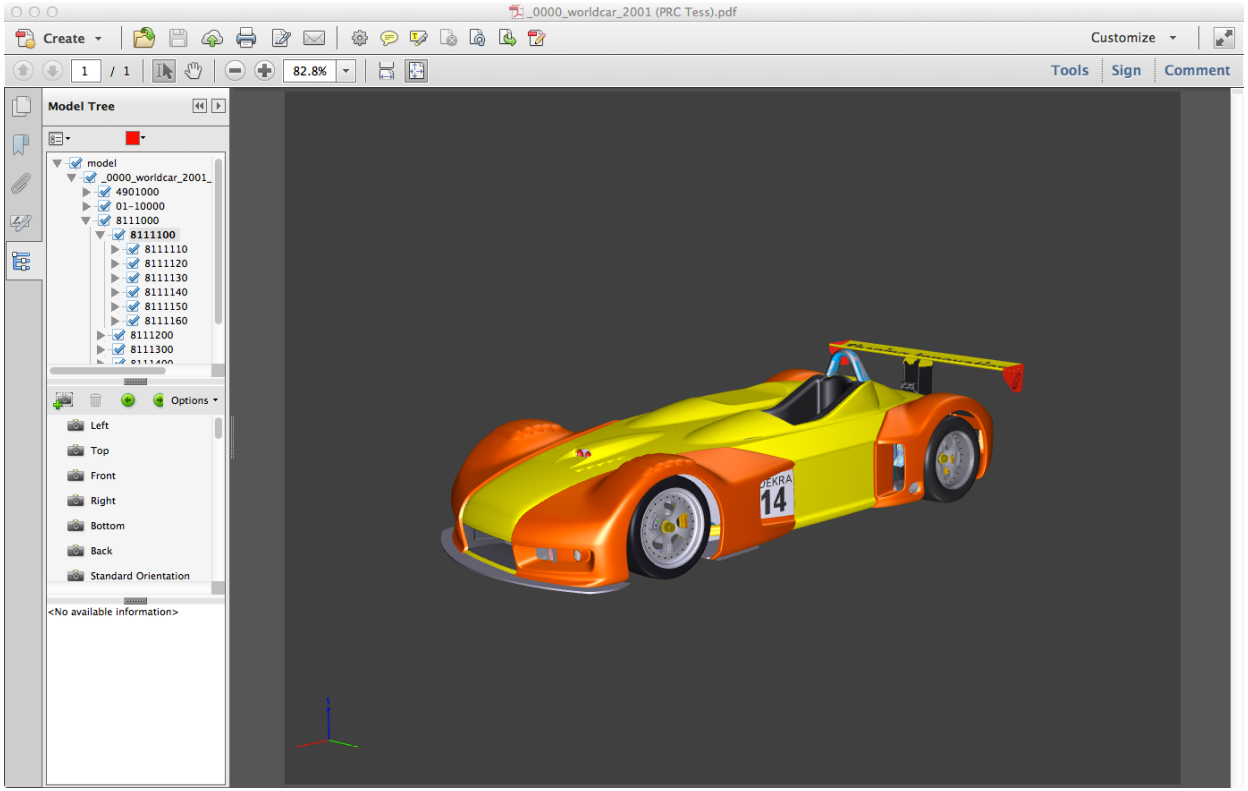

A PDF Association Presentation · © 2013 by PDF Association · www.pdfa.org

Engineering archival requirements

- Preserve attribute data that is associated to the model
  - Properties – materials
  - Manufacturing Information - PMI
  - Constraints
- Preserve views of the model
  - Camera, Hide/Show, Sections, etc.

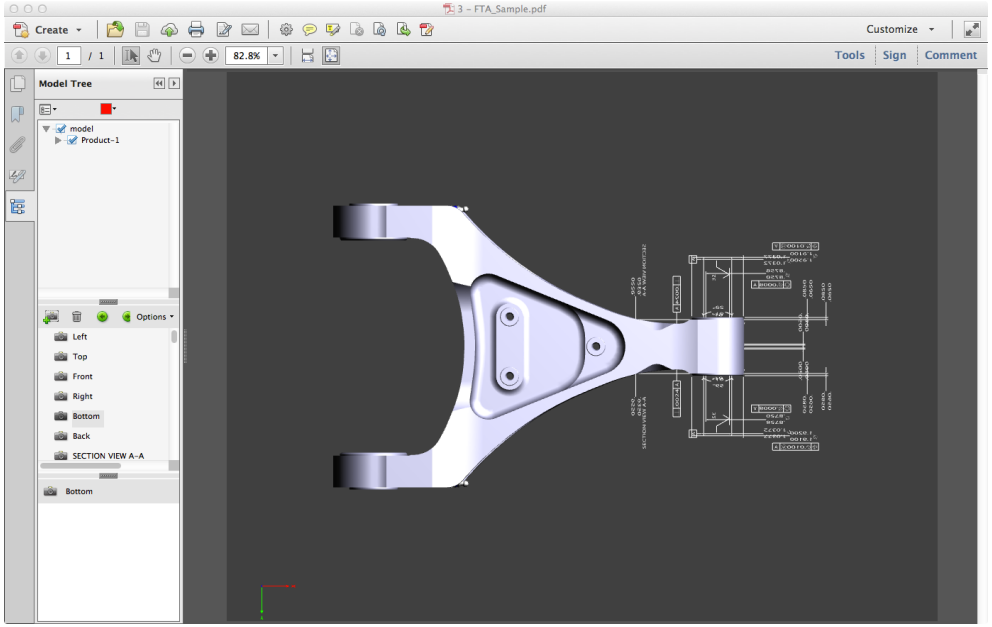

A PDF Association Presentation · © 2013 by PDF Association · www.pdfa.org

Engineering archival requirements

- Preserve relationships between data and the model
  - Inspection data
  - Bill of Materials (BOM)
  - Animations
  - Visual Response
- Javascript!

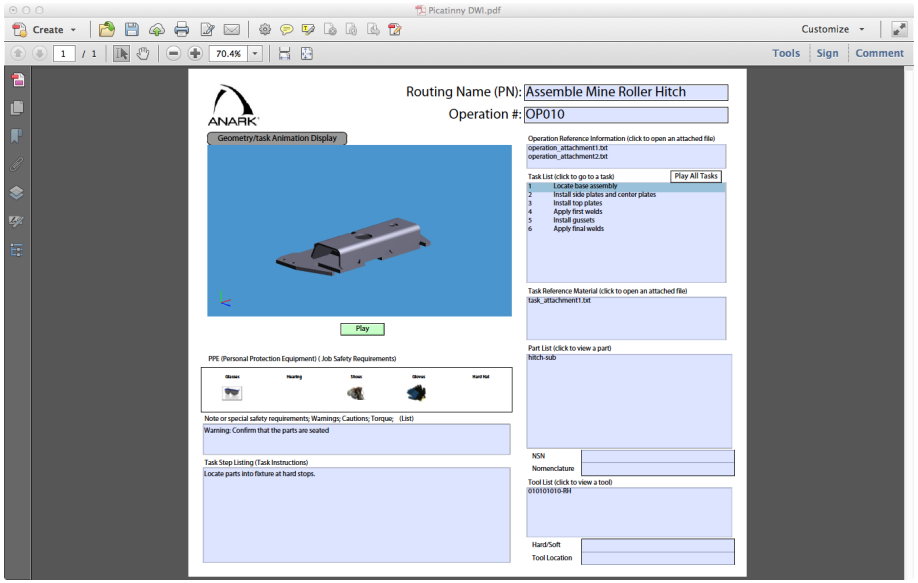

A PDF Association Presentation · © 2013 by PDF Association · www.pdfa.org

Engineering archival requirements

- Preserve validation information
- Requires the ability to encrypt data
- Requires the ability to attach additional files (business information)

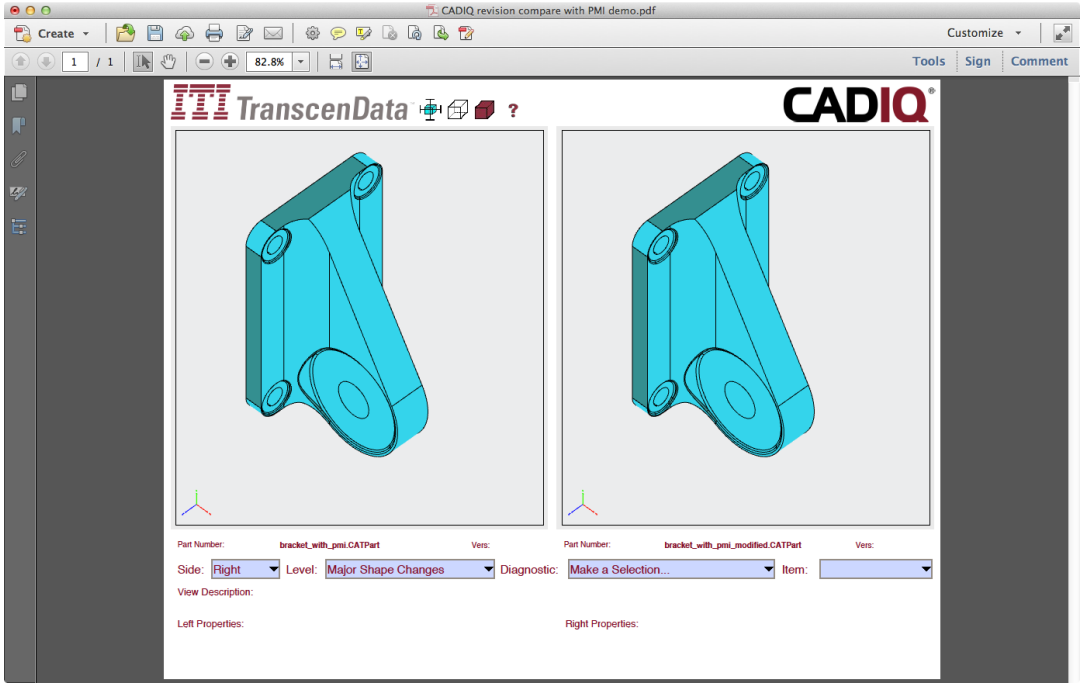

A PDF Association Presentation · © 2013 by PDF Association · www.pdfa.org

PDF/E-2 (ISO 24517-2)

- The Engineering Archival Format
  - Aligned with ISO 32000-2 (PDF 2.0) for engineering features
  - PRC (ISO 14739-1)
    - Compact, precise engineering data
  - Geospatial (GIS)
  - 2D & 3D Measurements
  - 3D JavaScript
- Currently under development

A PDF Association Presentation · © 2013 by PDF Association · www.pdfa.org

How to find out more about PDF/E-2

- Talk to the PDF Association
  http://www.pdfa.org
- Visit the 3D PDF Consortium
  http://www.3dpdfconsortium.org
- Email us
  phil.spreier@3dpdfconsortium.org
  david.opsahl@3dpdfconsoritum.org
- Participate in the development of the standard

A PDF Association Presentation · © 2013 by PDF Association · www.pdfa.org